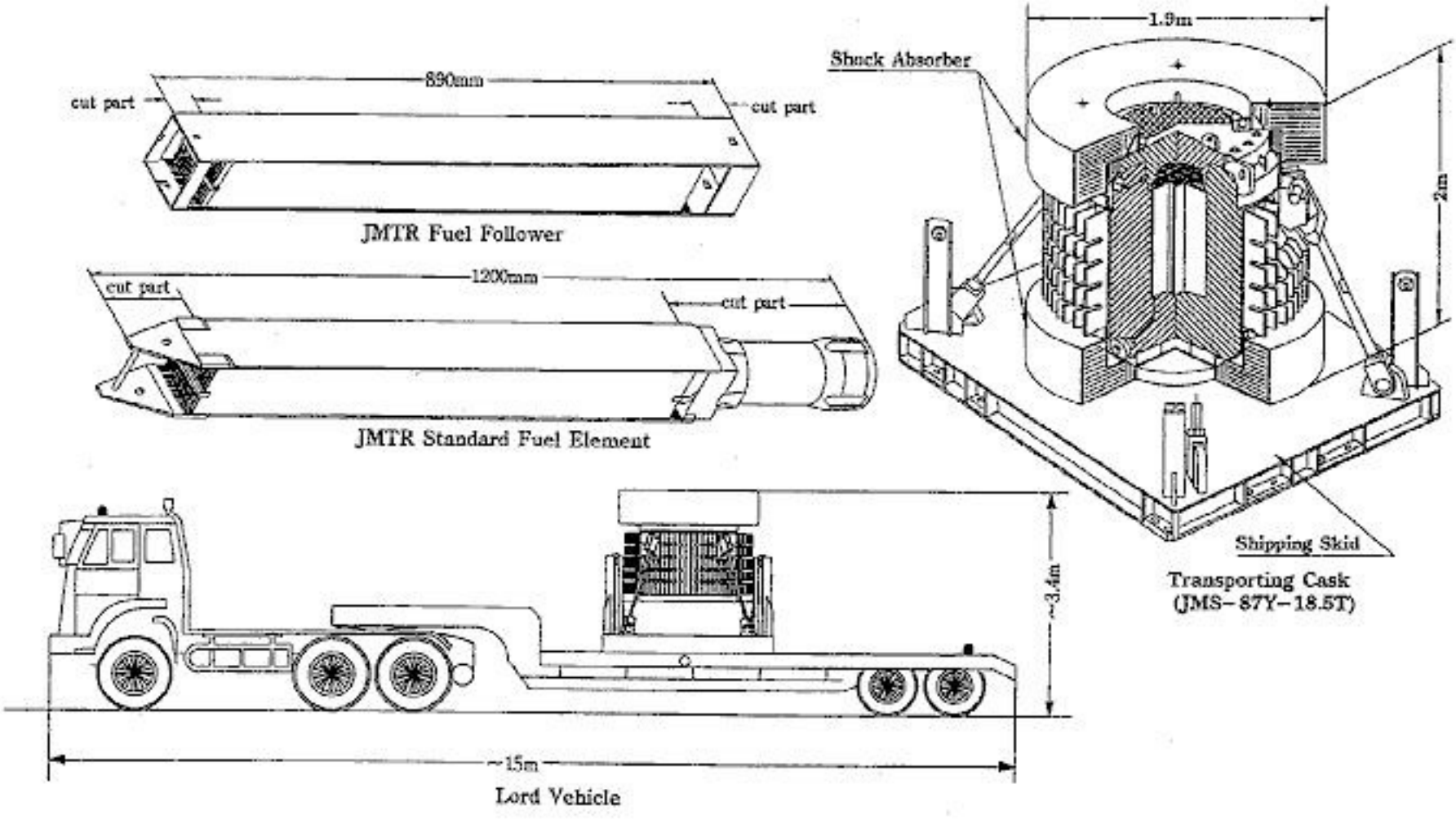

Figure-2 Transporting Cask, Fuel and Load Vehicle